Cotytech®
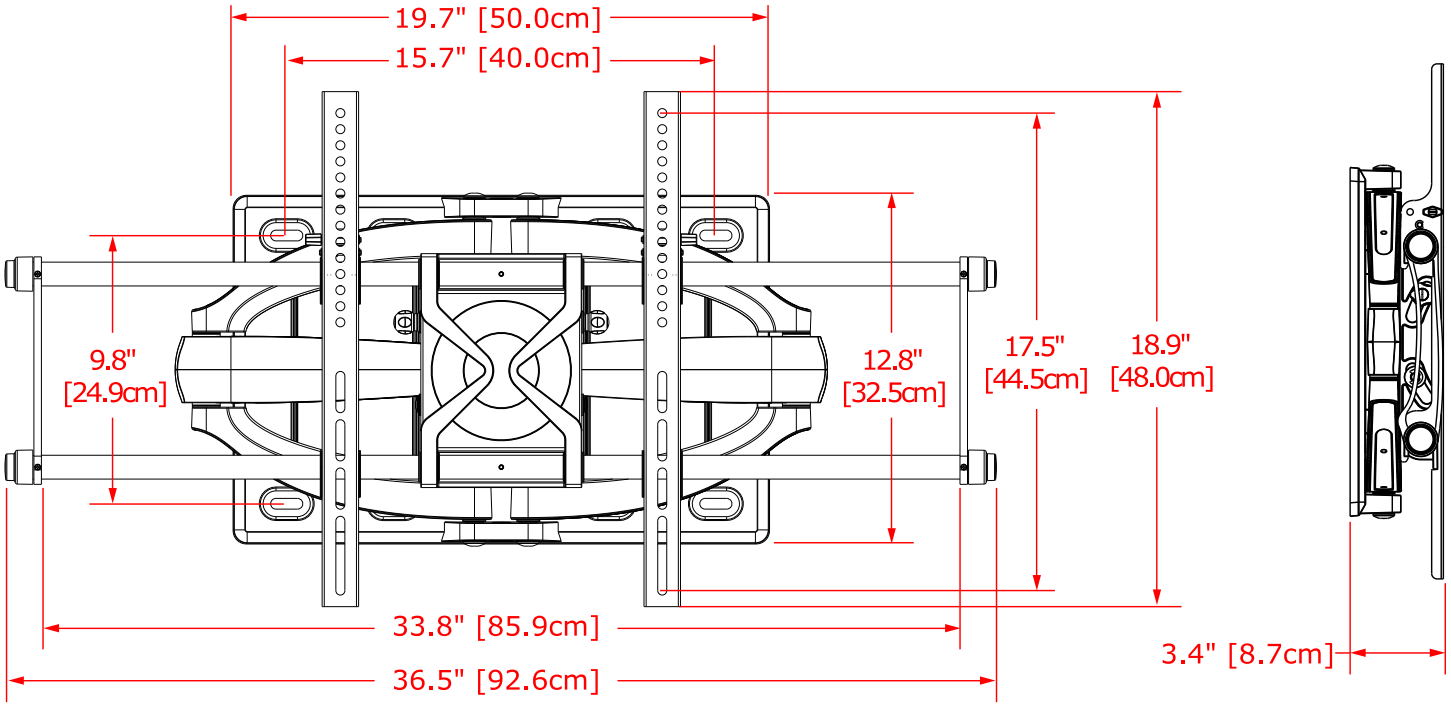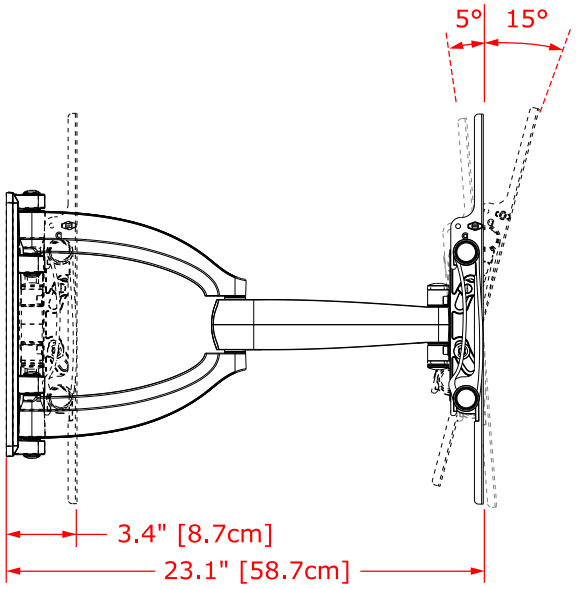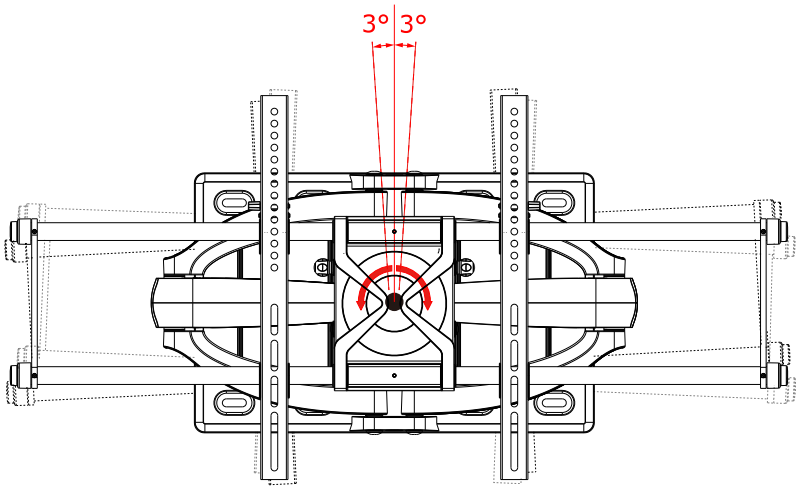
MW-6D1V
Full swing wall mount